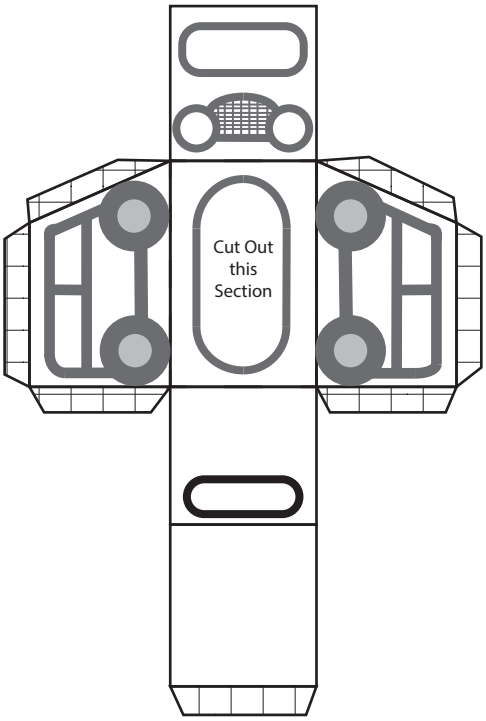
Cut Out
this
Section

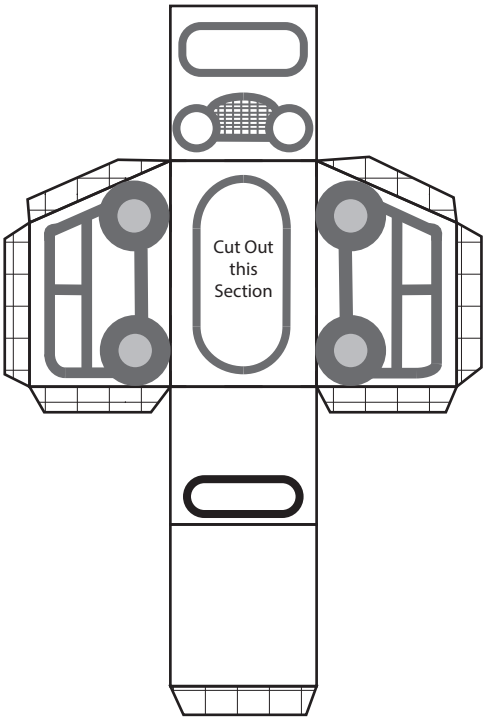
Cut Out
this
Section

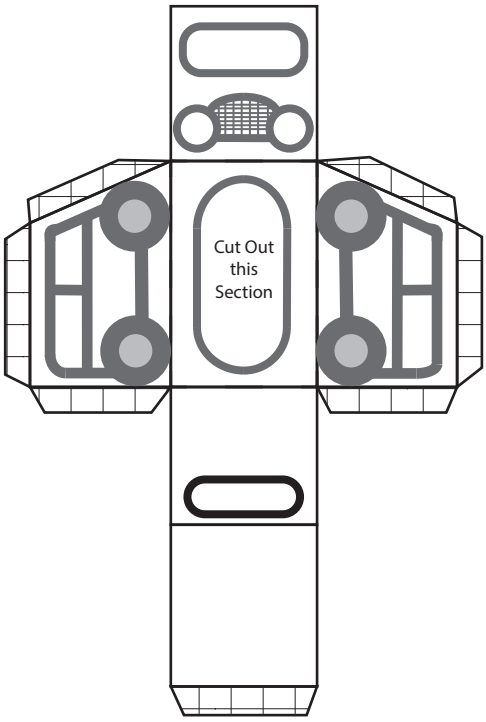
Cut Out
this
Section

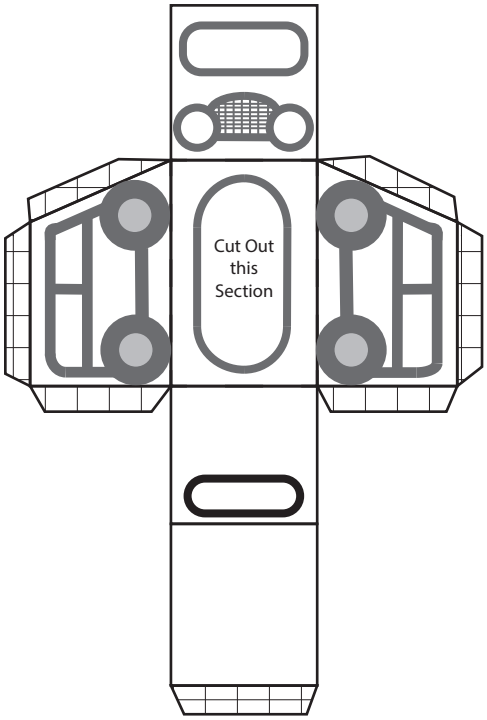
Cut Out
this
Section